N E T A F I M U S A

Potted Plant Watering Systems

A Labor Saving

Drip System

for Watering

Potted Plants





NETAFIM™
GROW MORE WITH LESS

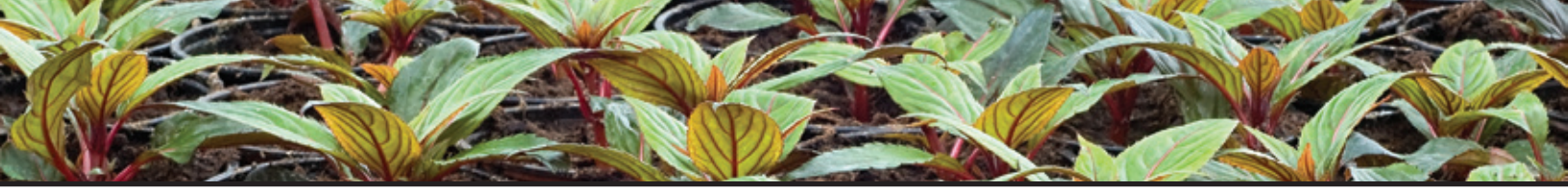

A Low Cost Potted Plant Watering System That Saves Labor

Production Tool

Comparing a Netafim system to hand watering is like comparing a hand saw to a power saw. A hand tool is fine if you have the time, but for production scale growing, power tools are a terrific step forward.

Higher Crop Value

This results from having a highly uniform top quality crop - which is what to expect when water and fertilizer uniformity are improved. Netafim's Multi Outlet Drippers (MOD) feature both pressure compensation and a built-in check valve. This combination of features (referred to as PCNL) is the highest level of technology available in drippers today. This technology ensures that every plant will receive exactly the same amount of water and fertilizer regardless of where the plant is located within the system. Each dripper adjusts itself automatically to the system pressure and elevation so that even on rolling or sloped ground, the uniformity of watering is 94%. The built-in check valve prevents unwanted drainage of the system onto the lowest plants when the watering cycle is completed.

Less Disease

Water on foliage and flowers can spread disease rapidly. By applying water directly to the pot, the rest of the plant remains dry. Additionally, pesticides which are applied to the foliage are not washed off by daily watering. This can reduce the need for spraying, further lowering production costs and decreasing run-off.


4-Way MOD System


8-Way MOD System


Angle Arrow Dripper

Multi-Outlet Drippers Improve Plant Quality

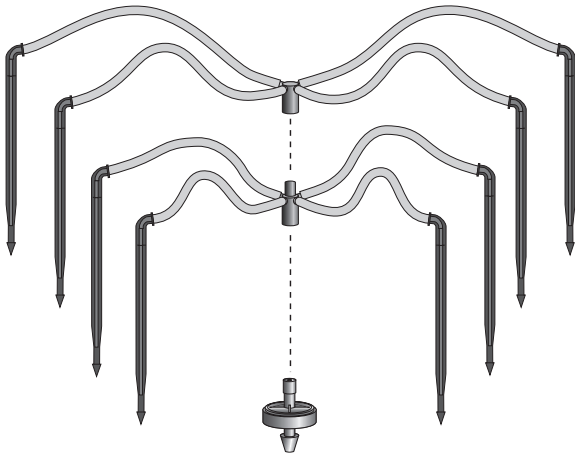



Manifold Versatility

When many small pots are to be watered, two manifold assemblies can be stacked together to create an 8-Way assembly. The flow per pot is then 0.25 gallons per hour (GPH). For every 10 gallons per minute (GPM) available, 2,000 pots can be watered.

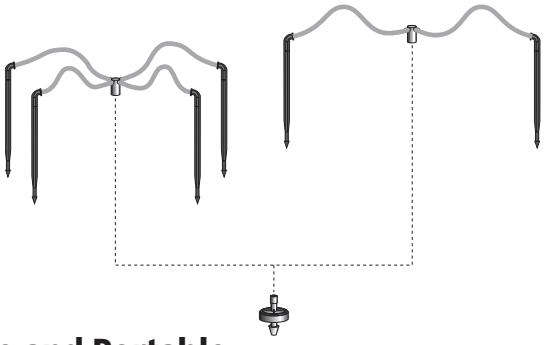



Flexible and Portable

The flat manifold separates for easy storage or transport in a box or bundle. The dripper supply tubing (with the dripper attached) can then be rolled up without tangling the spaghetti tubes. If a different plant spacing is desired, simply change the manifold.

Low Cost and Fast Payback

Payback for a complete system is usually within the first season of operation.

Payback Period *for a Netafim Pot Watering System*

Hand Watering Schedule *(per plant)*	**3 seconds once a day**			
Cost per Plant	**$0.50**			
Wages & Benefits *(per hour)*	**$8**	**$9**	**$10**	**$12**
Netafim System Payback *(days)*	**75**	**67**	**60**	**50**



Multi-Outlet Dripper Components



Flat 4-Way Stackable Manifold



Flat 4-Way Manifold



Flat 2-Way Manifold

Three Manifold Options

The flat manifold is ideal for field applications. The low-profile design and durable construction resists damage from field workers. The Flat 2-Way or 4-Way Stackable manifold is combined with a 4-Way manifold to create additional configurations.

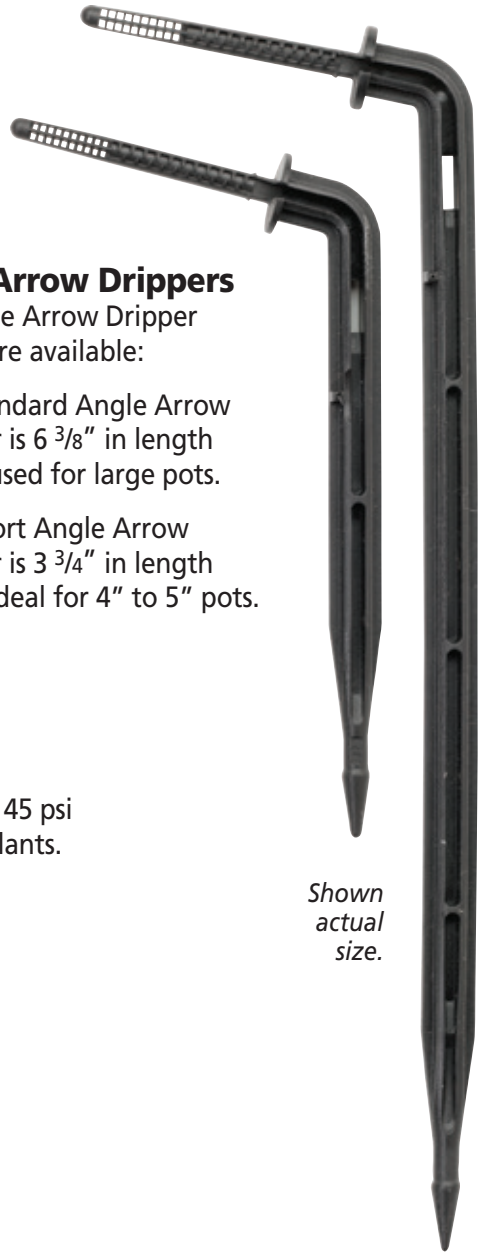

Angle Arrow Drippers

Two Angle Arrow Dripper options are available:

- The standard Angle Arrow Dripper is 6 3/8" in length and is used for large pots.
- The Short Angle Arrow Dripper is 3 3/4" in length and is ideal for 4" to 5" pots.

Shown actual size.

Pressure Compensating Drippers

The WPCJL is pressure compensating to provide a constant flow from 10 to 45 psi and has a built-in check valve to prevent system drainage into the lowest plants.

- Flat 4-Way manifold is usually combined with the 2.0 GPH WPCJL Dripper - 0.50 GPH per plant.
- Flat 2-Way manifold is usually combined with the 1.0 GPH WPCJL Dripper - 0.50 GPH per plant.





UV White™ PE Tubing

Fully UV resistant and completely opaque to prevent algae growth. This tubing is not coated or layered white; it is solid white for long-term durability. Netafim's UV White™ PE Tubing produces cooler water temperatures and enhances plant growth.



Design Help for Multi-Outlet Dripper Watering Systems

Step 1 Using the top row of the table at the right, select the dripper spacing to be used. By matching this to the length of pipe column, the correct size Dripper Supply Pipe can be determined.

Step 2 Use the Zone Flow Chart below to determine the Flow Demand for the system. Select from the chart the number of plants to be watered at the same time. Use the resulting flow from this to determine the correct sizing for the pipe and control head components. Note that the 4-Way MOD has a flow of 0.50 gallons per hour *(GPH)* per plant, and the 8-Way MOD has a flow of 0.25 GPH per plant.

4-Way MOD Dripper Supply Pipe Sizing

Length of Pipe *(feet)*	Dripper Spacing *(inches)* 6"	12"	18"	24"	36"
50	16mm poly	16mm poly	16mm poly	16mm poly	16mm poly
100	1/2"				
150	3/4" poly	1/2" poly			
200		3/4" poly	1/2" poly		
250	1" poly			1/2" poly	
300			3/4" poly		
350				3/4" poly	1/2" poly
400		1" poly			

Assumes 35 psi inlet pressure, 10 psi at last dripper and no slope.

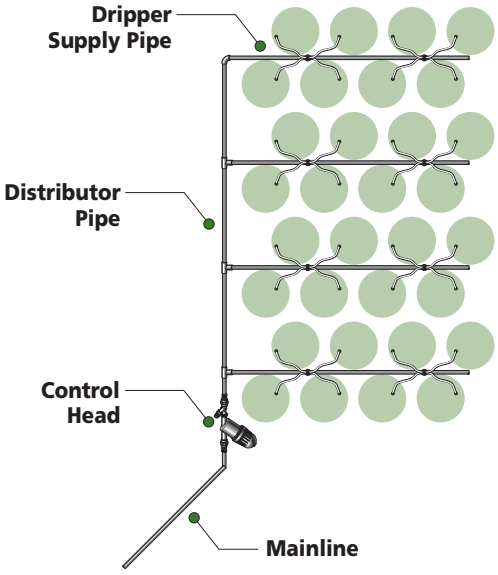

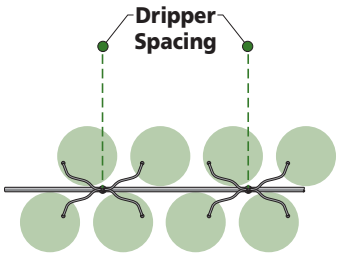

Zone Flow Chart *(GPM)* *Assumes use of a 2.0 GPH dripper.*

Number of Plants	200	400	600	800	1000	1200	1400	1600	1800	2000
GPM 4-Way MOD	2	3	5	7	8	10	12	13	15	17
GPM 8-Way MOD	1	2	3	3	4	5	6	7	8	8





Design Help for Multi-Outlet Dripper Watering Systems

Step 3 Size the Distributor and Mainline Pipes using the maximum Flow Demand from the largest zone or combination of zones which may be watered at the same time. Either PVC, or polyethylene pipe can be used for the Distributor and Mainline. If PVC is used above ground, it should be painted to prevent light penetration, which can result in the growth of algae within the pipe. These charts are appropriate for distributor lengths up to 40 feet and mainlines up to 100 feet. When slopes are a factor, when longer length pipes are needed, or for other special conditions, please consult a certified Netafim System Designer for assistance.

Distributor and Mainline Pipe Sizing

Pipe Size	Maximum GPM*
1/2"	6
3/4"	10
1"	17
1 1/4"	28
1 1/2"	37
2"	58

**Assumes class 160 PVC and 5 fps water velocity.*

Step 4 Size the Control Head *(valve, filter and pressure regulator)* based on the Flow Demand determined in step 2. It is very important to recognize the minimum flow for the pressure regulator. Be sure to size the pressure regulator by determining both the minimum, and the maximum number of plants which may be watered at the same time. Use a 35 psi Low Flow Pressure Regulator with zones of 400 pots or less and 4-Way MODs. The size of the Control Head components should be determined by the flow demand, and not the size of the pipe that connects to them. Mixed size pipes and components (e.g. 1" filter on 1 1/2" pipe) will have no negative effect on the operation of the system if properly sized by the flow demand.



Valve



Filter



Pressure Regulator

Filter and Valve Sizing

	Maximum Flow *(GPM)*	Unit Size	Model Number
Electric Valve *(AC)*	26 44 110 176	3/4" Globe 1" Globe 1 1/2" Globe 2" Globe	61ET.75GH2 61ET1GH2 61ET1.5GH2 61ET2GH2
Disc Filter *(120 mesh)*	12 26 52 110	3/4" 1" 1 1/2" Super 2" Dual Lite	25A45-120 25A47-120 25A17-120 25A2DL-120

Pressure Regulator Sizing

	Flow Range *(GPM)*	Unit Size	Model Number
Pressure Regulator *(35 psi)**	5 to 17.6 11 to 35 22 to 70	3/4" 1 1/2" 2" (x4)	32PRV.75-35V2K 32PRV1.5-35V2K 32PRV2-435V2K



Control Head Assembly Order:

1. Valve
2. Filter
3. Pressure Regulator

**Size of components vary based on flow rate.*



Ordering Information

For complete assembly, order one (A) Manifold Assembly and one (B) Woodpecker Pressure Compensating Junior Dripper.

NOTE: *The flow per arrow dripper is equal to the dripper flow divided by the number of arrow drippers on that assembly. To ensure plants will receive equal water flow, use the same assemblies on each zone.*

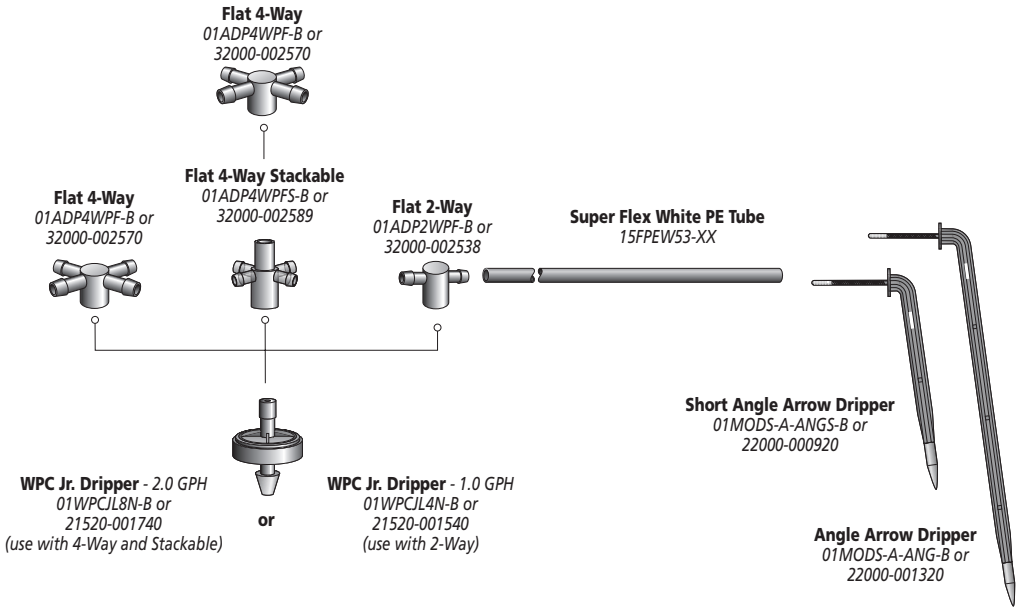

Flat 4-Way MOD Assemblies

	Item Number	Model Number	Arrow Dripper	Tube Lengths	Pack Qty.
A	40201-002550	014DM-1818F	Standard	(4) at 18"	25
	40201-002600	014DM-1818FS	Short	(4) at 18"	25
	40201-003200	014DM-1830F	Standard	(2) at 18" & (2) at 30"	25
	40201-003300	014DM-1830FS	Short	(2) at 18" & (2) at 30"	25
	40201-003600	014DM-2424F	Standard	(4) at 24"	25
	40201-003800	014DM-2424FS	Short	(4) at 24"	25
	40201-003900	014DM-2436F	Standard	(2) at 24" & (2) at 36"	25
	40201-004400	014DM-3030F	Standard	(4) at 30"	25
B	21520-001740	01WPCJL8N-B	WPC Jr. Dripper 2.0 GPH		250

Flat 4-Way Stackable MOD Assemblies

	Item Number	Model Number	Arrow Dripper	Tube Lengths	Pack Qty.
A	40201-007500	014DMS-1818F	Standard	(4) at 18"	25
	40201-008000	014DMS-2424F	Standard	(4) at 24"	25
	40201-008200	014DMS-2436F	Standard	(2) at 24" & (2) at 36"	25
	40201-008400	014DMS-3030F	Standard	(4) at 30"	25
B	21520-001740	01WPCJL8N-B	WPC Jr. Dripper 2.0 GPH		250

Flat 2-Way Stackable MOD Assemblies

	Item Number	Model Number	Arrow Dripper	Tube Lengths	Pack Qty.
A	40201-001500	012DM-2424F	Standard	(2) at 24"	25
	40201-001700	012DM-3030F	Standard	(2) at 30"	25
B	21520-001540	01WPCJL4N-B	WPC Jr. Dripper 1.0 GPH		250



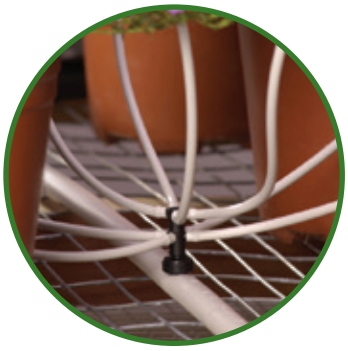



NETAFIM™
GROW MORE WITH LESS

NETAFIM USA
5470 E. HOME AVE.
FRESNO, CA 93727
CS 888 638 2346
F 800 695 4753
www.netafimusa.com

G222 6/15