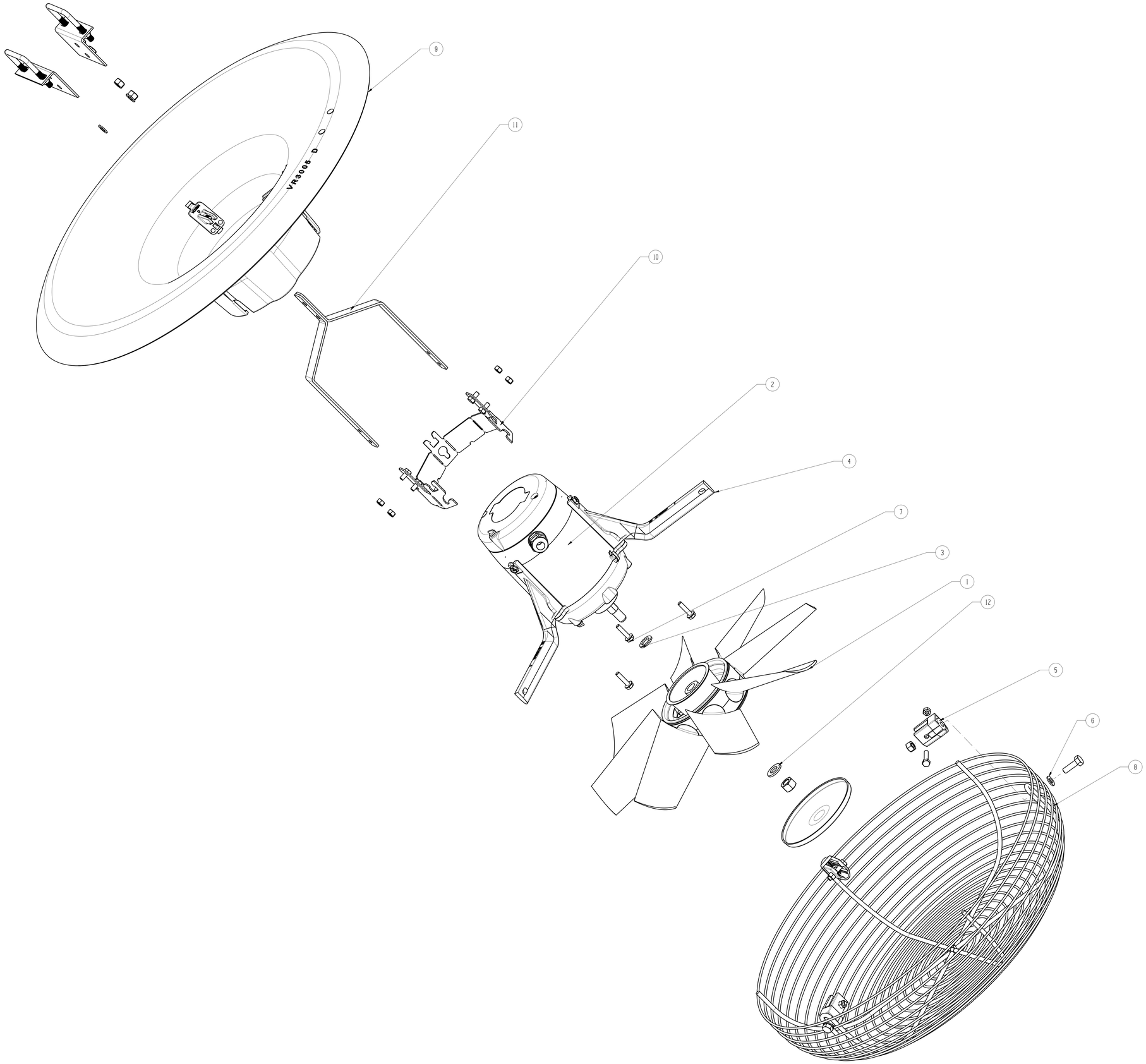

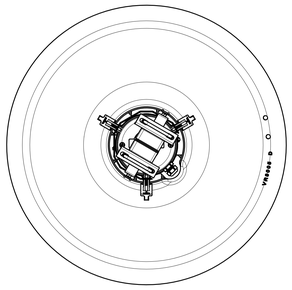

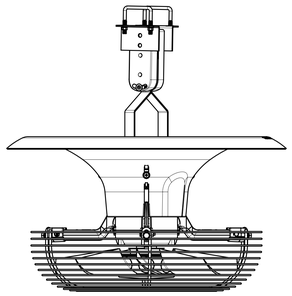

	C	9-1-2018						
	D	11-3-2019						
Wut. no.	Rev.	Date	Init.	Remarks				
Drawn	Y. Popol		Remarks			Westermann companies Vostermans Ventilation BV PO Box 3005 5803DA Venlo - Netherlands		
Date	20-01-2014							
Checked								
General roughness	General tolerance according: ISO 2768-mK		Material	Surface treatment	CAD file NX	Units mm	Projection	Scale 1:1
Description						Size	Drawing no.	Rev.
Assembly V-Flo Fan 40 with plastic cap						A0	VS2510	D

© Copyright